UJI BAHAN TEKNIK

Uji Tarik
Uji Kekerasan
Uji impact
Uji Metalografy

UJI TARIK BAHAN

- DAPAT MENGETAHUI KEKUATAN TARIK MAKS
- KEKUATAN LULUH (YIELD)
- KEULETAN
- RAPUH/GETAS
- KEKAKUAN

GAMBAR DIAGRAM DATA UJI TARIK

- DIAGRAM BEBAN DAN PERPANJANGAN

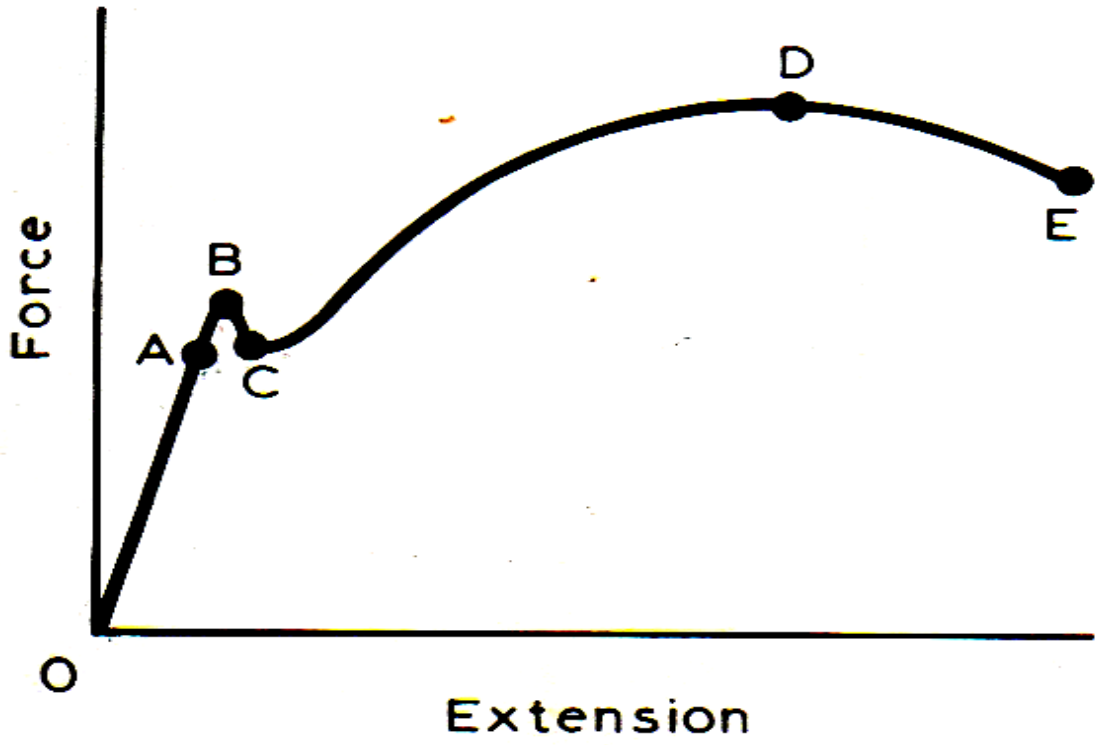

Diagram Tegangan Regangan

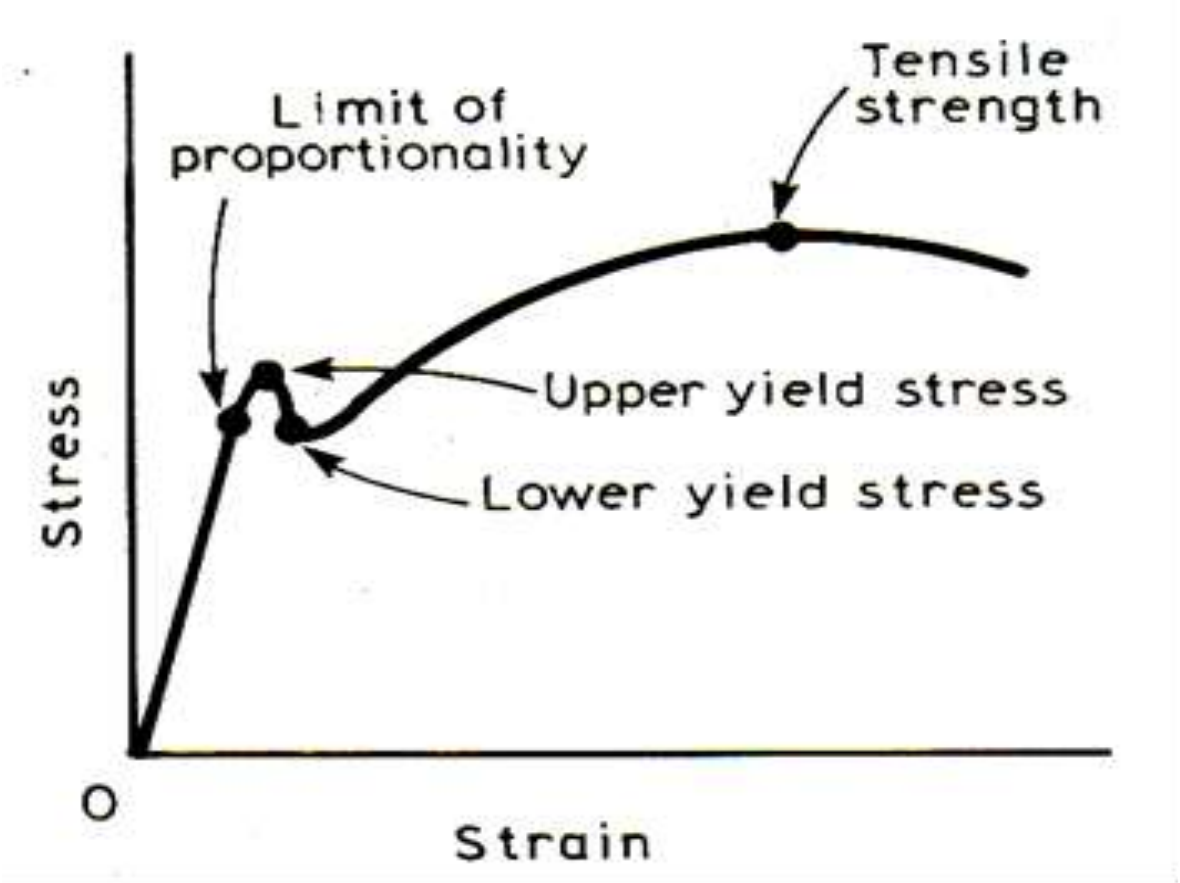

Tabel dimensi spesimen uji tarik

A (mm^2)	d_o (mm)	L_o (mm)	L_c (mm)	r (mm)	
				Logam di-rol	Logam di-cor
200	15,96	80	88	15	30
150	13,82	69	76	13	26
100	11,28	56	62	10	20
50	7,98	40	44	8	16
25	5,64	28	31	5	10
12,5	3,99	20	21	4	8

Ukuran Spesimen untuk bahan rata

b (mm)	L_o (mm)	L_c (mm)	L_t (mm)	r (mm)
25	100	125	300	25
12,5	50	63	200	25
6	24	30	100	12
3	12	15	50	6

BENTUK SPESIMEN BULAT DAN SEGI EMPAT

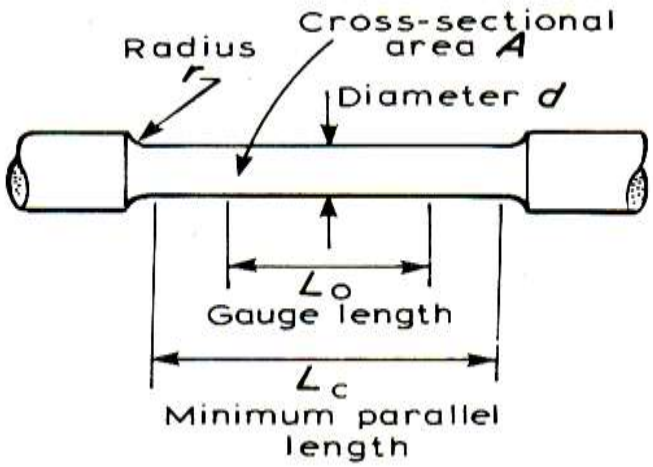

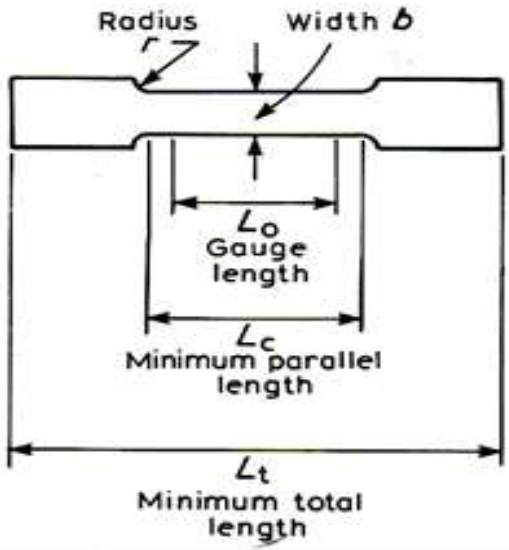

Tabel kekuatan tarik

Bahan	Modulus Young (kN/mm^2)	Kekuatan Tarik (N/mm^2)
Aluminium paduan	70	100-550
Tembaga paduan	110	200-1300
Magnesium paduan	45	150-350
Nikel paduan	200	400-1600
Titanium paduan	100	400-1600
Seng paduan	100	200-350
Besi tuang kelabu	100	150-400
Baja karbon rendah	200	350-500
Feritik Stainless steel	200	500-600
Martensitik Stainless steel	200	450-1300
Polyethylene, low	0,2	8-16
Polyethylene, high	0,9	22-38
PVC	2,7	52-58
Polystyrene	3,3	35-60
Nilon 6	2,2	70-90

LEMBAR DATA

X. LEMBAR DATA
Mesin Uji Tarik : TarnoGrocki
Bahan benda uji : .....
Standar : .....
Crosshead speed : .....mm/detik

DATA dan PERHITUNGAN	BENDA UJI	
	SILINDRIS	RATA
Diameter benda uji (d) (mm) Lebar (w) dan Tebal (t) (mm)		
Luas area •Awal, A_o (mm^2) •Akhir, A_f (mm^2)		
Panjang ukur •Awal, L_o (mm) •Akhir, L_f (mm)		
Beban luluh , N		
Beban maksimum, N		
Beban putus, N		
Kekuatan Luluh, N/mm^2		
UTS, N/mm^2		
Kekuatan Putus, N/mm^2		
Elongasi, %		

LEMBAR DATA UNTUK PENCATATAN

DATA PENCATATAN BEBAN DAN PERTAMBAHAN PANJANG

PENCATATAN		PERHITUNGAN	
P (N)	ΔL(mm)	σ(N/mm^2)	ε(mm/mm)

UJI KEKERASAN

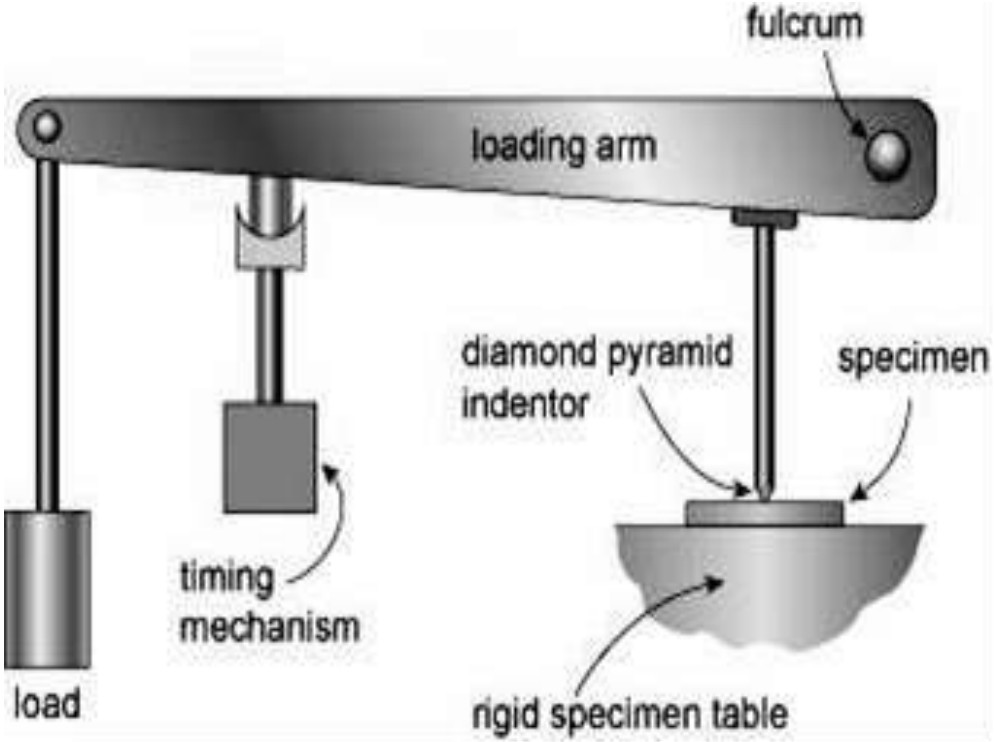

UJI KEKERASAN METODE BRINELL

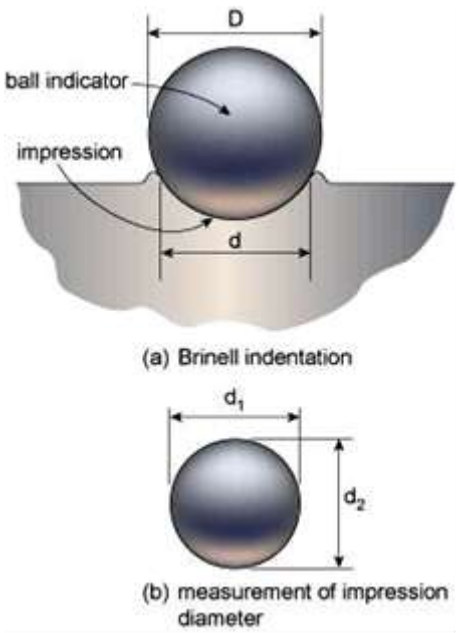

$$BHN = \frac{2P}{\pi D(D - \sqrt{D^2 - d^2})}$$

UJI KEKERASAN METODE VICKERS

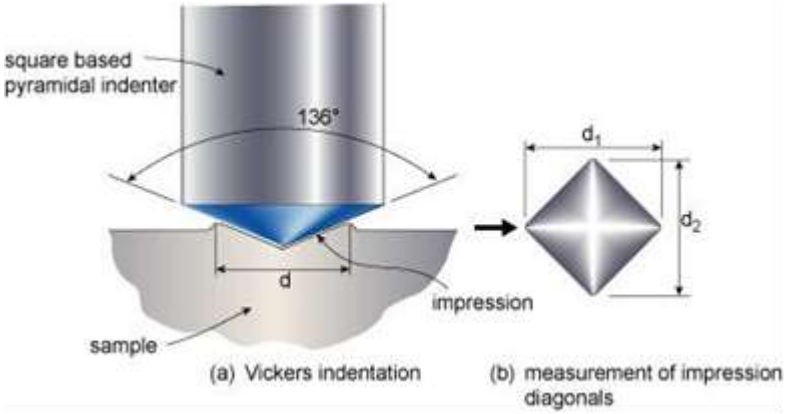

$$VHN = \frac{1{,}854P}{d^2}$$

UJI KEKERASAN METODE ROCKWELL

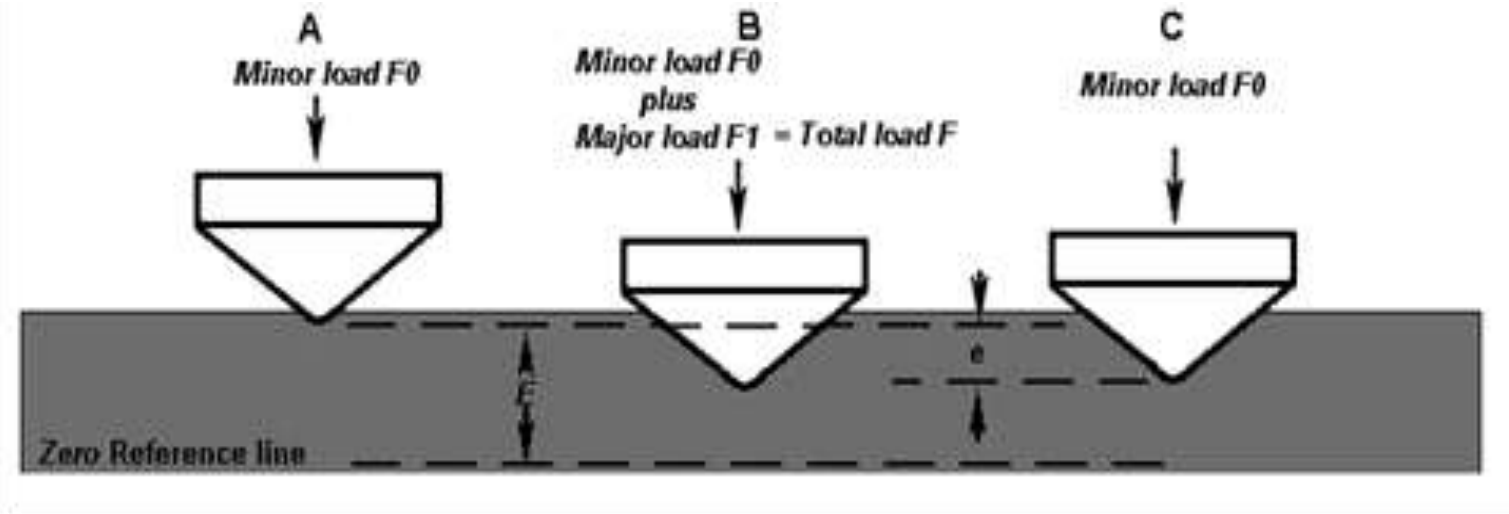

TABEL ROCKWELL

TABLE 1-5 The Rockwell Hardness Scales*

SCALE	MAJOR LOAD, KG	TYPE OF INDENTER	TYPICAL MATERIALS TESTED
A	60	Diamond cone	Extremely hard materials, tungsten carbides, etc.
B	100	1/16" ball	Medium hard materials, low- and medium-carbon steels, brass, bronze, etc.
C	150	Diamond cone	Hardened steels, hardened and tempered alloys
D	100	Diamond cone	Case-hardened steel
E	100	1/8" ball	Cast iron, aluminum and magnesium alloys
F	60	1/16" ball	Annealed brass and copper
G	150	1/16" ball	Beryllium copper, phosphor bronze, etc.
H	60	1/8" ball	Aluminum sheet
K	150	1/8" ball	Cast iron, aluminum alloys
L	60	1/4" ball	Plastics and soft metals such as lead
M	100	1/4" ball	Same as L scale
P	150	1/4" ball	Same as L scale
R	60	1/2" ball	Same as L scale
S	100	1/2" ball	Same as L scale
V	150	1/2" ball	Same as L scale

* Ametek Testing Equipment Systems, East Moline, Ill.

KONVERSI KEKERASAN

Kekerasan Brinell	Kekerasan Vickers	Kekerasan Rock-well. B	C
112	114	66	
121	121	70	
131	137	74	
140	148	78	
153	162	82	
166	175	86	4
174	182	88	7
183	192	90	9
192	202	92	12
202	213	94	14
210	222	96	17
228	240	98	20
248	248	102	24
262	263	103	26
285	287	105	30
302	305	107	32
321	327	108	34
341	350	109	36
370	392		40
390	412		42
410	435		44
431	459		46
452	485		48
475	510		50
500	545		52

KEKERASAN MATERIAL

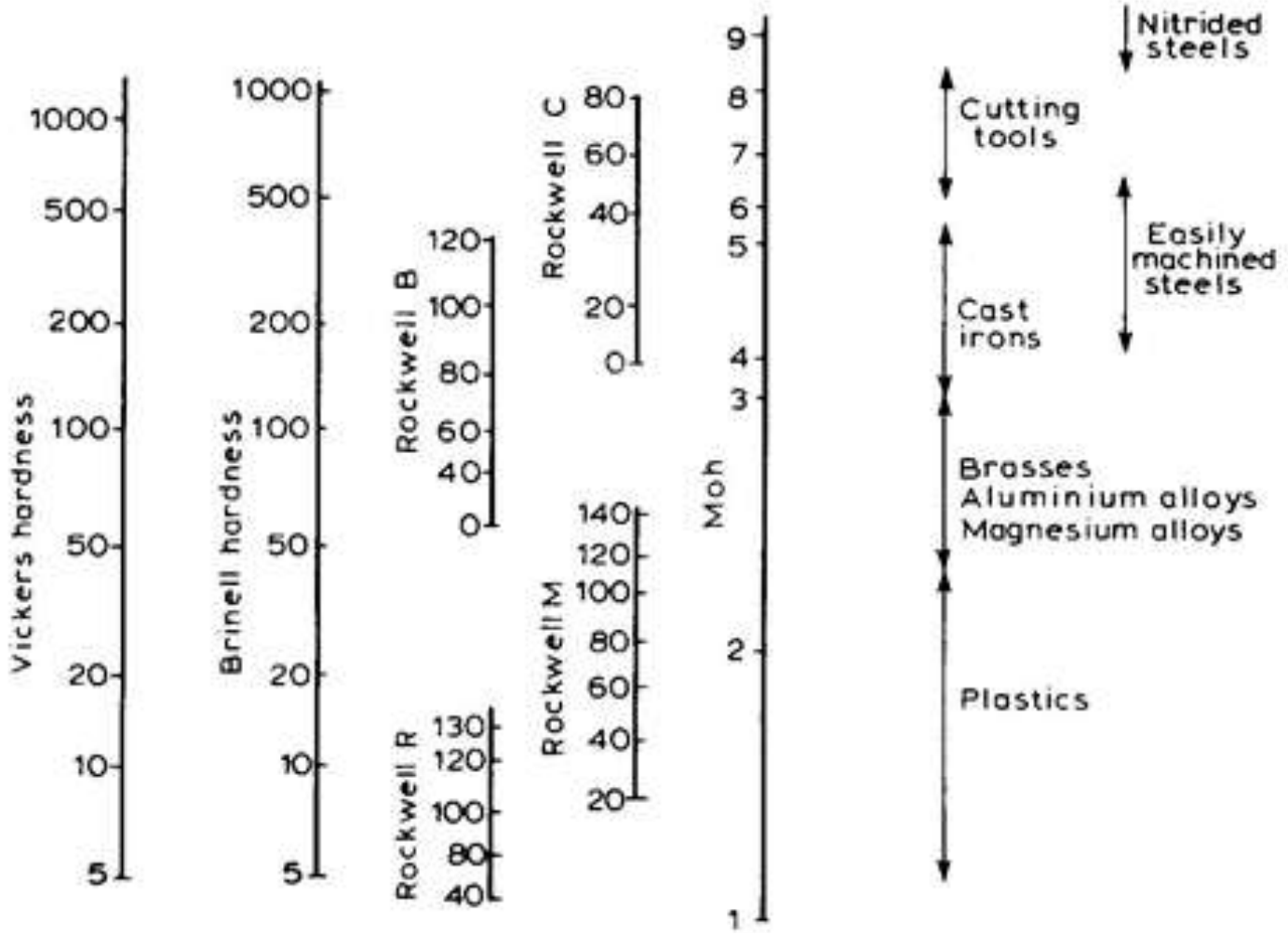

DATA UJI KEKERASAN BRINELL

LEMBAR DATA

No.	Benda Uji	Kondisi pengujian	In-den-tasi	Jejak Indentasi (mm)			BHN	Catatan
				d_1	d_2	d_{ave}		
1		D= mm P= kg t= detik	1					
			2					
			3					
			4					
			5					
2		D= mm P= kg t= detik	1					
			2					
			3					
			4					
			5					
3		D= mm P= kg t= detik	1					
			2					
			3					
			4					
			5					
4		D= mm P= kg t= detik	1					
			2					
			3					
			4					

DATA UJI UNTUK HRC

No.	Benda Uji	Kondisi pengujian	In-den-tasi	HRC	Catatan
1		P= kg t= detik	1		
			2		
			3		
			4		
			5		
2		P= kg t= detik	1		
			2		
			3		
			4		
			5		
3		P= kg t= detik	1		
			2		
			3		
			4		
			5		
4		P= kg t= detik	1		
			2		
			3		
			4		
			5		

UJI IMPACT

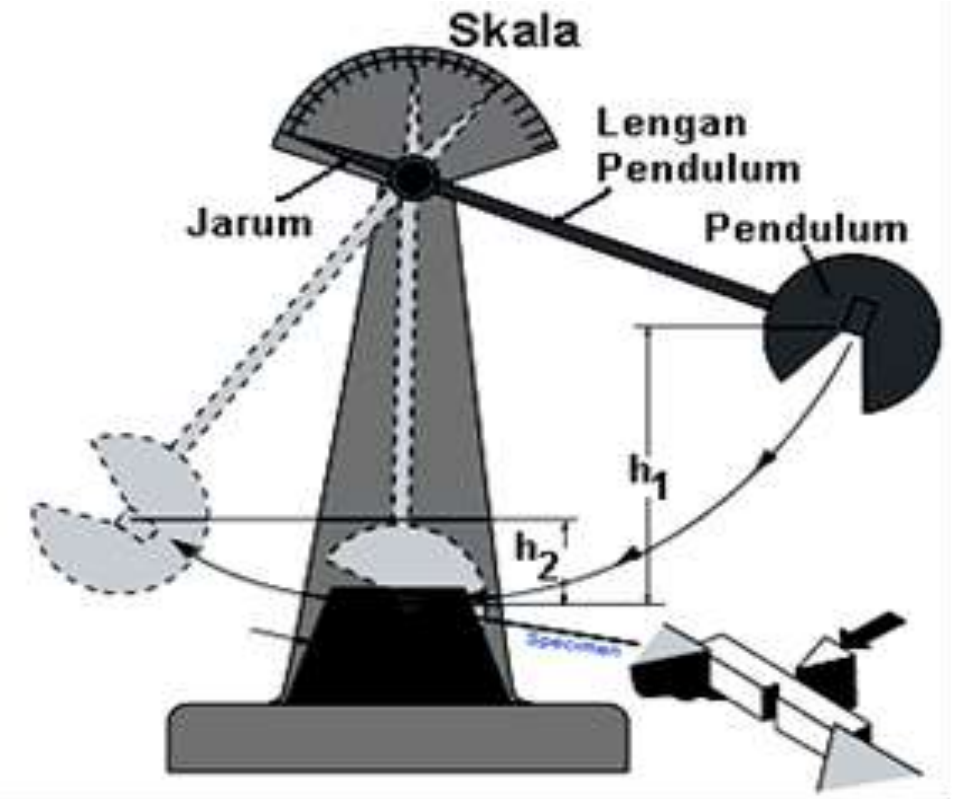

BENTUK STANDAR SPESIMEN IMPACT

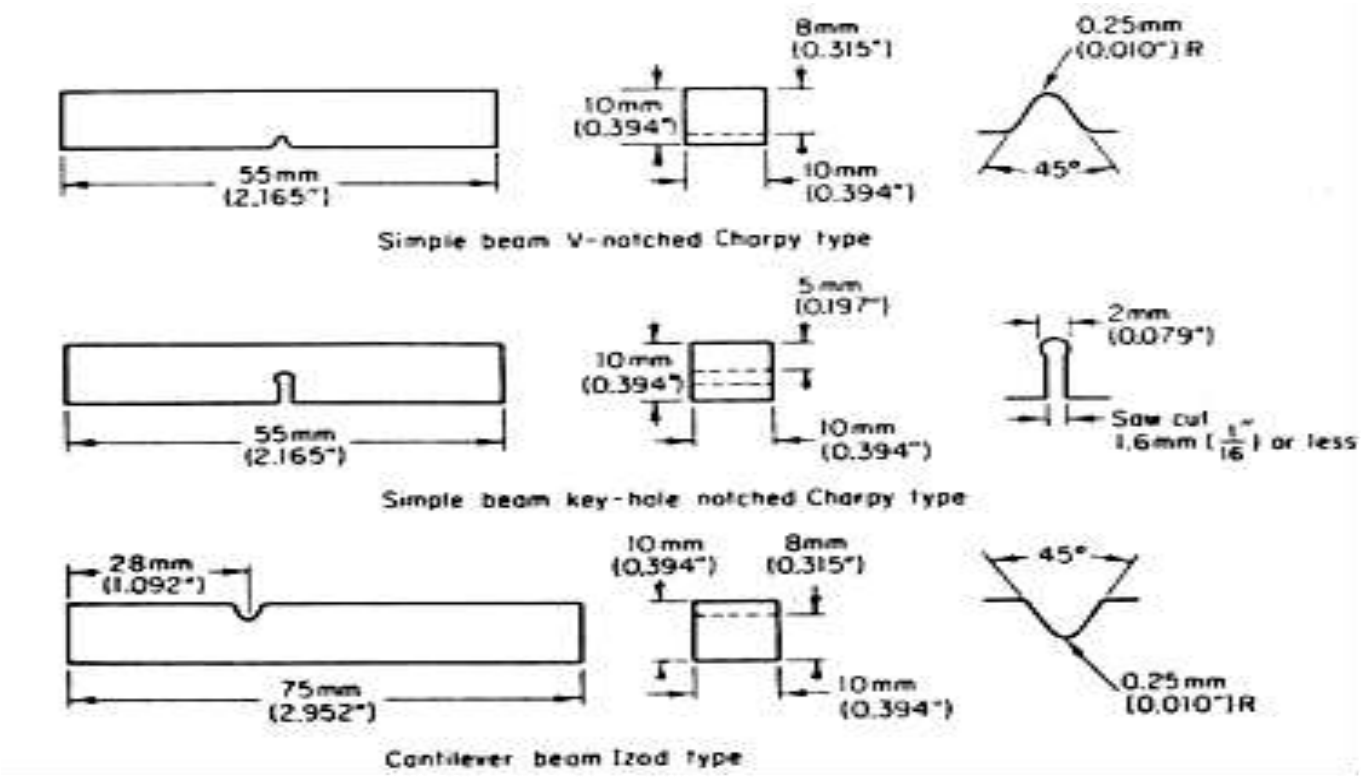

TABEL KEKUATAN IMPACT

Material	*Charpy V Impact strength/J*
Aluminium, commercial pure, annealed	30
Aluminium–1.5% Mn alloy, annealed	80
hard	34
Copper, oxygen free HC, annealed	70
Cartridge brass (70% Cu, 30% Zn), annealed	88
¼ hard	21
Cupronickel (70% Cu, 30% Ni), annealed	157
Magnesium–3% Al, 1% Zn alloy, annealed	8
Nickel alloy, Monel, annealed	290
Titanium–5% Al, 2.5% Sn, annealed	24
Grey cast iron	3
Malleable cast iron, Blackheart, annealed	15
Austenitic stainless steel, annealed	217
Carbon steel, 0.2% carbon, as rolled	50

Material	*Impact strength*/kJ m^{-2}*
Polythene, high-density	30
Nylon 6.6	5
PVC, unplasticised	3
Polystyrene	2
ABS	25

* Notch-tip radius 0.25 mm, depth 2.75 mm

MACAM METODE IMPACT

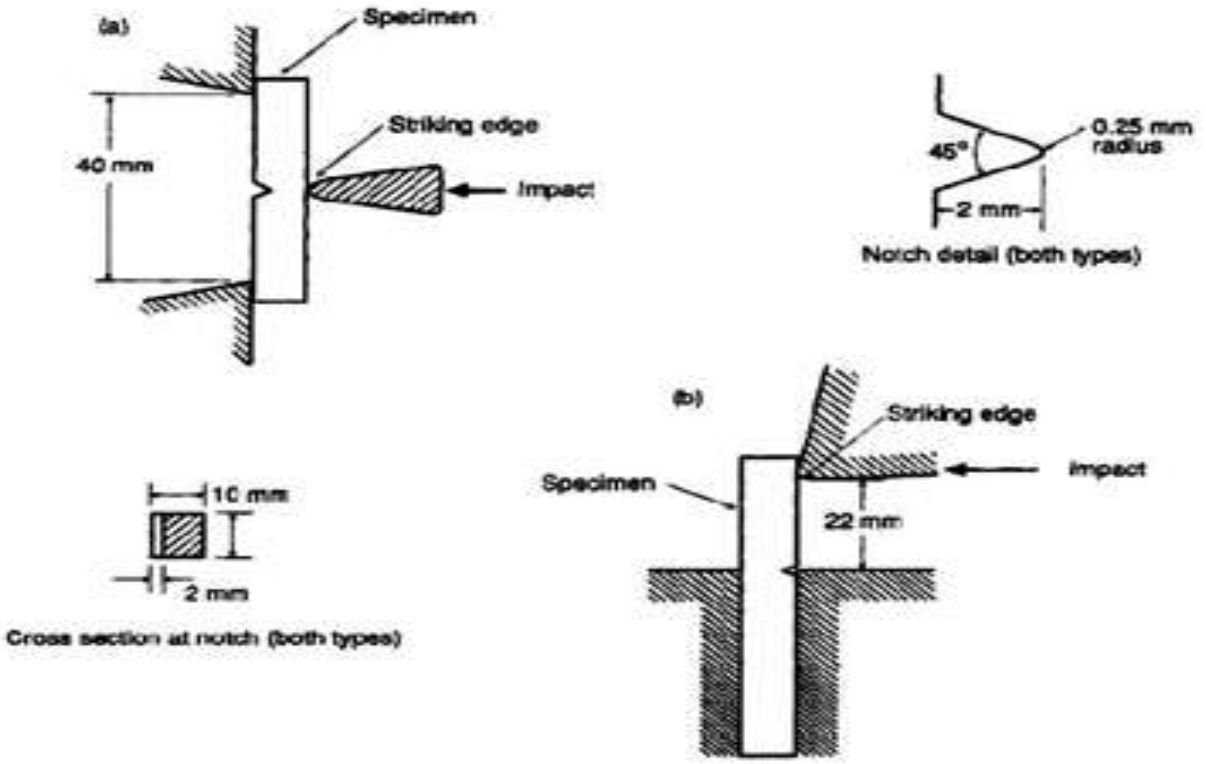

PENCATATAN DATA UJI IMPACT

No.	Sudut awal (°)	Sudut Akhir (°)	Ketinggian Awal h_1 (m)	Ketinggian Akhir h_2 (m)	Energi Impak EI (Joule)

No.	T (°C)	a (mm)	b (mm)	A (mm^2)	E (Joule)	HI (Joule/mm^2)	Bentuk Patahan	Deskripsi Patahan
1								
2								
3								

Bahan benda uji: .....
Metode : Charpy
Beban: .....

a = tinggi section di bawah takik (mm)
b = lebar sampel (mm)
A = luas penampang di bawah takik = a x b (mm^2)

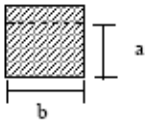

U = Energi yang diserap (J)
HI = Harga Impak = E/A (J/mm^2)

PENUTUP

TERIMA KASIH